Product Submittal Sheet

REV	DESCRIPTION	DATE	APPROVAL

SIDE VIEW

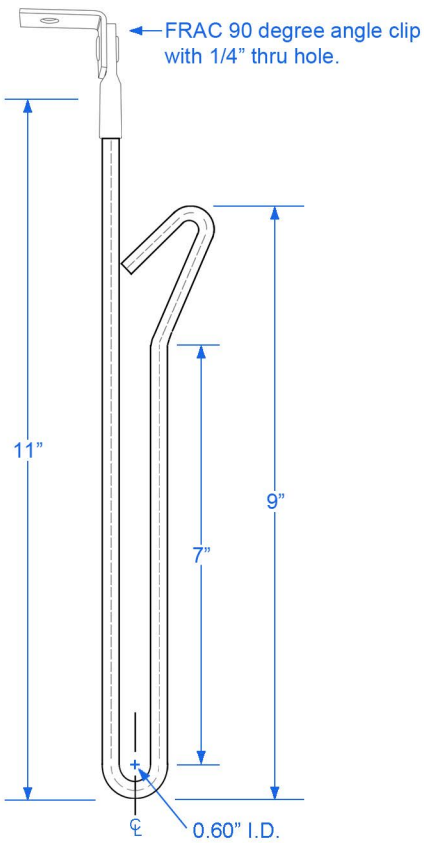

BACK VIEW

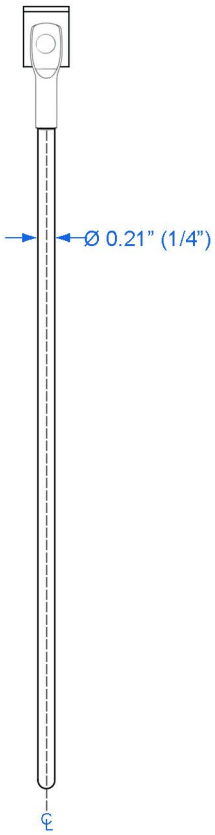

CAPACITY CHART:

SIZE 3/8" - 1/2"	Cable O.D.	Capacity
14-2, 14-3,14-4, 12-2 12-3, 12-4, 10-2, 10-3	0.47" - 0.60"	8-10 pcs.

Notes:

Product weight 0.28 lbs. each.

Material	Mild Carbon Steel
Finish	Electro plated Zinc
Origin	Designed in California, Made in China
Certification	RoHS Compliant
Pkg. Qty.	1 PC
UPC	686064372712

RoHS compliant ECO FRIENDLY

Product Information

MCS11FRAC (1 PC)

6 86064 37271 2

DOC'S®

DOC'S INDUSTRIES, INC.

Doc's Industries, Inc. 4121 Guardian St. Simi Valley , CA 93063
www.docsindustries.com Phone: 800-544-8706

Part Number: **MCS11FRAC**

Title: 11" Metal Clad Cable Stacker assembled to FRAC 90 degree angle clip with 1/4" thru hole & built-in cable retainer.

Date: 1/11/2023	Drawn by: RO
Drawing Number: MC1103	Sheet 1 of 1